Remote control SIPROTEC 4 devices via analog ke-Modems 28.8k and (Mini-) Starcoupler

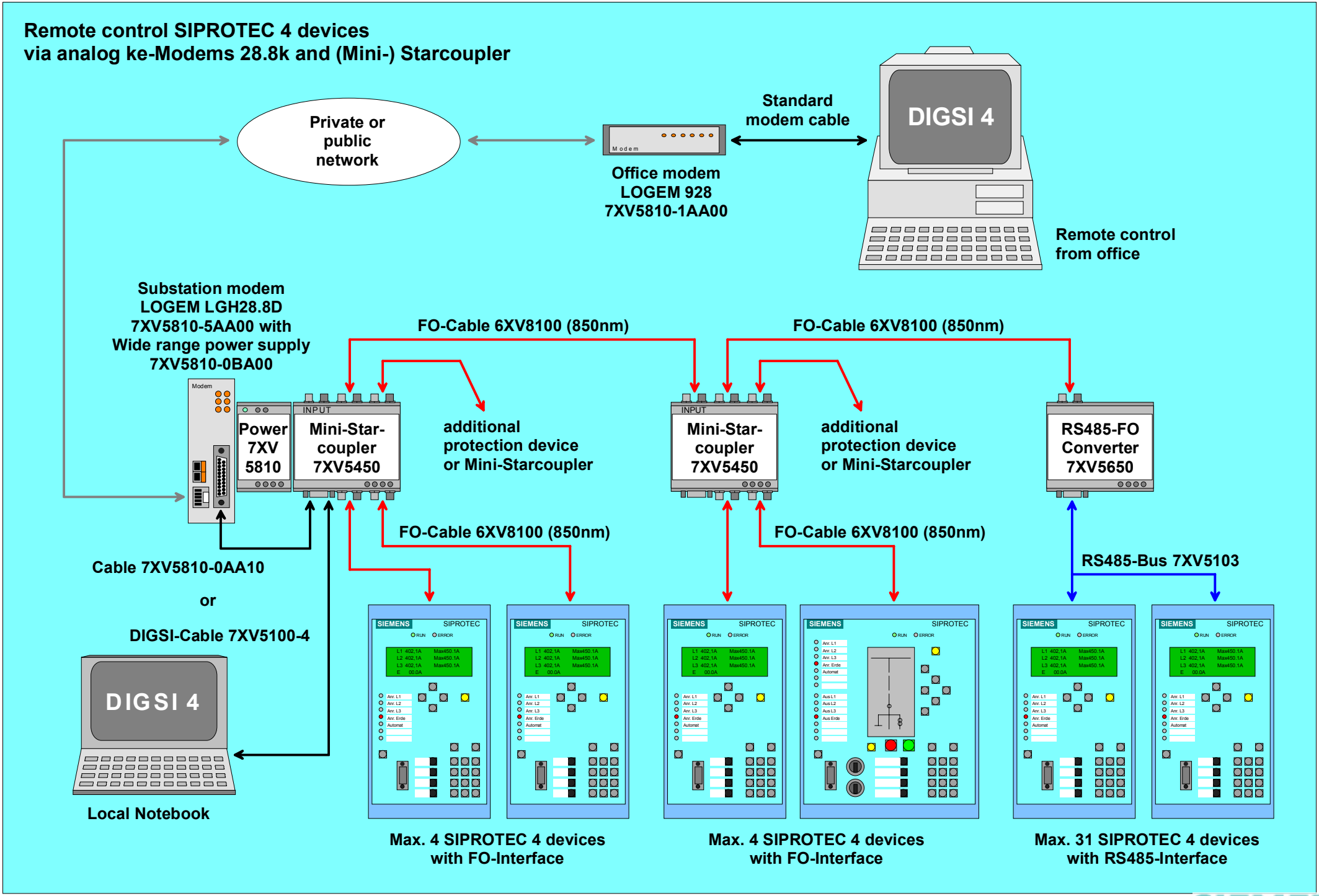

SIEMENS
siemens-russia.com